VE46 Pipe/Tubing Roll Grooving Tools

VE46 AND VE46P

MANUAL FEED, IN-PLACE ROLL GROOVING TOOLS ADAPTABLE FOR MOTORIZED OPTION





⚠ WARNING



Failure to follow instructions and warnings could result in death or serious personal injury, property damage, and product damage.

- **Before operating or servicing any pipe preparation tools, read all instructions in the operating and maintenance manual and all warning labels on the tool.**
- **Wear safety glasses, hardhat, foot protection, and hearing protection while working around pipe preparation tools.**
- **Save the operating and maintenance manual in a place accessible to all operators of the tool.**

If you need additional copies of any literature, or if you have questions concerning the safe and proper operation of any pipe preparation tools, contact Victaulic, P.O. Box 31, Easton, PA 18044-0031, Phone: 1-800-PICK VIC, E-Mail: pickvic@victaulic.com

Original Instructions

TABLE OF CONTENTS

Hazard Identification 2
Operator Safety Instructions 2
Introduction 4
Receiving the Tool 4
Container Contents 4
Optional Power Drive Kit Contents 4
Power Requirements 5
Power Drive Requirements. 5
Extension Cord Requirements 5
Tool Nomenclature. 6
Tool Dimensions and Specifications 7
Tool Setup
Pipe Vise Setup 8
Groove-in-Place Setup 8
Power Drive Mounting Plate Kit Installation. 9
Power Drive Setup 10
Preparation for Grooving. 14
Pipe Preparation 14
Pipe Lengths Suitable for Grooving 14
Short Pipe Lengths 14
Long Pipe Lengths. 16
Groove Depth Adjustment. 17
Grooving Operation for Pipe Vise or Groove-in-Place Setup 18
Dismounting the Tool 21
Grooving Operation for Power Drive Setup 22
Maintenance 26
Lubrication 26
Parts Ordering Information 26
Accessories. 27
Troubleshooting
General and “In-Place” Grooving 28
Tools Installed on a Power Drive 29
VE46 Ratings - Maximum Pipe Size and Wall Thickness Capacity. 30
Link to OGS Groove Specifications 31
Links to Additional Resources. 31
EC Declaration of Incorporation 32
UK Declaration of Incorporation 33

HAZARD IDENTIFICATION

Definitions for identifying the various hazard levels are provided below.



This safety alert symbol indicates important safety messages. When you see this symbol, be alert to the possibility of personal injury. Carefully read and fully understand the message that follows.

⚠ DANGER

- **The use of the word "DANGER" identifies an immediate hazard with a likelihood of death or serious personal injury if instructions, including recommended precautions, are not followed.**

⚠ WARNING

- **The use of the word "WARNING" identifies the presence of hazards or unsafe practices that could result in death or serious personal injury if instructions, including recommended precautions, are not followed.**

⚠ CAUTION

- **The use of the word "CAUTION" identifies possible hazards or unsafe practices that could result in personal injury and product or property damage if instructions, including recommended precautions, are not followed.**

NOTICE

- **The use of the word "NOTICE" identifies special instructions that are important but not related to hazards.**

OPERATOR SAFETY INSTRUCTIONS

The VE46 is designed for the sole purpose of roll grooving pipe. These instructions must be read and understood by each operator PRIOR to working with the grooving tools. These instructions describe safe operation of the tool, including set up and maintenance. Each operator must become familiar with the tool's operations, applications, and limitations. Particular care should be given to reading and understanding the dangers, warnings, and cautions described throughout these operating instructions.

Use of these tools requires dexterity and mechanical skills, as well as sound safety habits. Although these tools are designed and manufactured for safe, dependable operation, it is difficult to anticipate all combinations of circumstances that could result in an accident. The following instructions are recommended for safe operation of these tools. The operator is cautioned to always practice "safety first" during each phase of use, including set up and maintenance. It is the responsibility of the lessee or user of these tools to ensure that all operators read this manual and fully understand the operation of these tools.

Store this manual in a clean, dry area where it is always readily available. Additional copies of this manual are available upon request through Victaulic.

⚠ WARNING

1. **Wear proper apparel.** Do not wear loose clothing, jewelry, or anything that can become entangled in moving parts.
2. **Wear protective items when working with tools.** Always wear safety glasses, hardhat, foot protection, gloves, and hearing protection.
3. **Keep hands and tools away from grooving bits and tracking wheel during the grooving operation.** Grooving area can crush or cut fingers and hands.

4. **Do not reach inside the pipe ends during tool operation.** Pipe edges can be sharp and can snag gloves, hands, and shirt sleeves.

⚠ CAUTION

1. **This tool is designed ONLY for roll grooving pipe/tubing sizes, materials, and wall thicknesses listed in the table on page 30.**
2. **Inspect the equipment.** Before using the tool, check all moveable parts for any obstructions. Ensure that guards and tool components are installed and adjusted properly.
3. **Stay alert.** Do not operate the tool if you are drowsy from medication or fatigue.
4. **Keep visitors, trainees, and observers away from the immediate work area.** All visitors should be kept a safe distance from the equipment at all times.
5. **Keep work areas clean.** Keep the work area around the tool clear of any obstructions that could limit the movement of the operator. Clean up any oil or other spills.
6. **Secure the work, tool, and accessories.** Ensure that the tool is stable. Refer to the "Tool Setup" section.
7. **Support the work.** Pipe should be supported by a pipe stand that is secured to the floor or to the ground.
8. **Do not force the tool.** Do not force the tool or accessories to perform any functions beyond the capabilities described in these instructions. Do not overload the tool.
9. **Maintain tool with care.** Keep the tool clean at all times to ensure proper and safe performance. Follow the instructions for lubricating tool components.
10. **Use only Victaulic replacement parts and accessories.** Use of any other parts may result in a voided warranty, improper operation, and hazardous situations.
11. **Do not remove any labels from the tool.** Replace any damaged or worn labels.

TOOLS USED WITH A POWER DRIVE

NOTICE

- **In addition to the previous safety instructions, the following safety instructions apply when using the VE46 with a power drive.**

⚠ DANGER

1. **VE46 tools that are intended for use with a power drive MUST have the optional power drive kit installed before attempting to groove pipe/tubing.**
2. **Avoid using the tool in potentially dangerous environments.** Do not expose the tool to rain, and do not use the tool in damp or wet locations. Do not use the tool on sloped or uneven surfaces. Keep the work area well lit. Allow sufficient space to operate the tool properly.
3. **Ground the power drive to protect the operator from electric shock.** Ensure that the drive motor is connected to an internally grounded electrical source.
4. **Prevent accidental startups.** Place the switch on the power drive to the "OFF" position before plugging the unit into the electrical source.
5. **Operate the tool only with a safety foot switch.** The tool must be operated with the safety foot switch that is located for easy operator access. Never reach across moving parts. If the tool does not contain a safety foot switch, do not use the tool, and contact Victaulic.
6. **Secure the power drive.** Ensure that the power drive is stable.
7. **Disconnect electrical power before servicing the tool.** Only authorized personnel should attempt to perform maintenance on the tool. Always disconnect the power before servicing or adjusting the tool.

INTRODUCTION

NOTICE

- **Drawings and/or pictures in this manual may be exaggerated for clarity.**
- **The tool, along with this operating and maintenance instructions manual, contains trademarks, copyrights, and/or patented features that are the exclusive property of Victaulic.**

The Victaulic VE46 series is designed for roll grooving pipe to receive Victaulic grooved pipe products, and can be operated manually or with a power drive.

⚠ CAUTION

- **This tool must be used ONLY for grooving pipe with specifications that fall within the designated parameters.**

Failure to follow this instruction could overload the tool, resulting in reduced tool life and/or damage to the tool.

RECEIVING THE TOOL

VE46 tools are packed individually in sturdy containers that are designed for repeated shipping. Save the original container for return shipment of rental tools.

Upon receipt of the tool, ensure that all necessary parts are included. If any parts are missing, contact Victaulic.

CONTAINER CONTENTS



Qty.	Description
1	VE46 Tool (S or P version, as ordered)
1	Set of Groove Depth Gauges (attached to tool)
1	Hand Crank
2	VE46 Operating and Maintenance Instructions Manual
1	RP-VE46 Repair Parts List

OPTIONAL POWER DRIVE KIT CONTENTS*

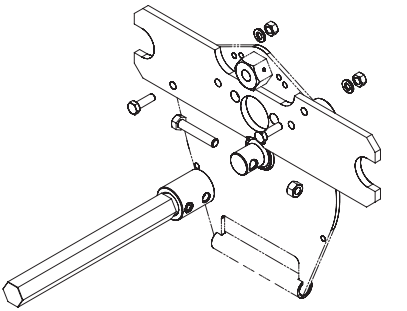

Qty.	Description
1	Power Drive Mounting Plate
1	Drive Shaft/Adapter
1	Hex Head Bolt
1	Hex Nut with Nylon Insert
2	Hex Head Cap Screw
2	Lock Washer
2	Hex Nut

* Kit Part Number (R-075-026-KIT)

POWER REQUIREMENTS

⚠ DANGER



- **To reduce the risk of electric shock, check the electrical source for proper grounding.**
- **Before performing any maintenance on the tool, turn the switch on the power drive to the "OFF" position, or disconnect the power cord from the electrical source.**

Failure to follow these instructions could result in death or serious personal injury.

POWER DRIVE REQUIREMENTS

VE46 tools are designed for manual operation or operation with a power drive. For power operation, tools mount directly onto a Victaulic VPD752 Power Drive or a Ridgid® 300 Power Drive. Consult the drive manufacturer's instructions for proper operation of the drive. Contact Victaulic for information regarding mounts for alternate power drives.

Power must be supplied to the drive motor through a safety foot switch to ensure safe operation. Ensure that the power drive is grounded properly in accordance with Article 250 of the National Electrical Code.

If an extension cord is required, refer to the "Extension Cord Requirements" section that follows for cord sizes. In addition, refer to the power drive manufacturer's instructions prior to use.

EXTENSION CORD REQUIREMENTS

When pre-wired outlets are not available and an extension cord must be used, it is important to use the proper cord size (i.e. Conductor Size American Wire Gauge). Cord size selection is based upon tool rating (amps) and cord length (feet). Use of a cord size (gauge) thinner than required will cause significant voltage drop at the power drive while the tool is operating. Voltage drops may cause damage to the power drive and can result in improper tool operation. **NOTE:** It is acceptable to use a cord size that is thicker than required.

The required cord sizes for cord lengths up to and including 100 ft/31 m are listed in the table below. Use of extension cords longer than 100 ft/31 m must be avoided.

Power Drive Rating volts/amps	Cord Lengths feet/meters		
	25 8	50 15	100 31
115 15	12 gauge	12 gauge	10 gauge

® Ridgid is a registered trademark of the Ridge Tool Company

TOOL NOMENCLATURE

NOTICE

- **Drawings and/or pictures in this manual may be exaggerated for clarity.**
- **The tool, along with this operating and maintenance instructions manual, contains trademarks, copyrights, and/or patented features that are the exclusive property of Victaulic.**

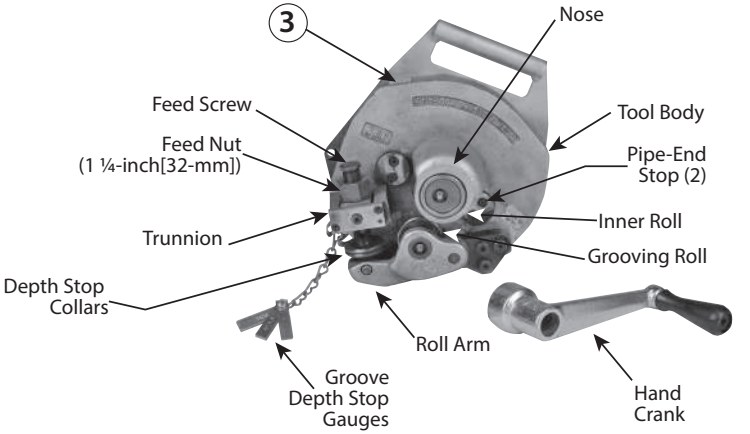

OPPOSITE SIDE OF TOOL

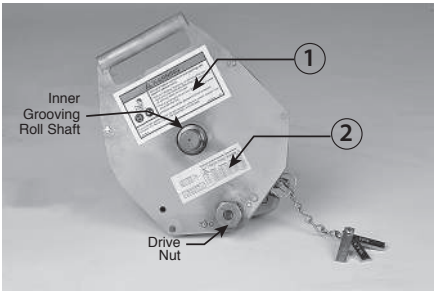

1 Warning Label (Varies depending upon which tool configuration is ordered)

2 Groove Diameter "C" Dimension Label (Varies depending upon which tool configuration is ordered)

3

KEEP HANDS AWAY

TOOL DIMENSIONS AND SPECIFICATIONS

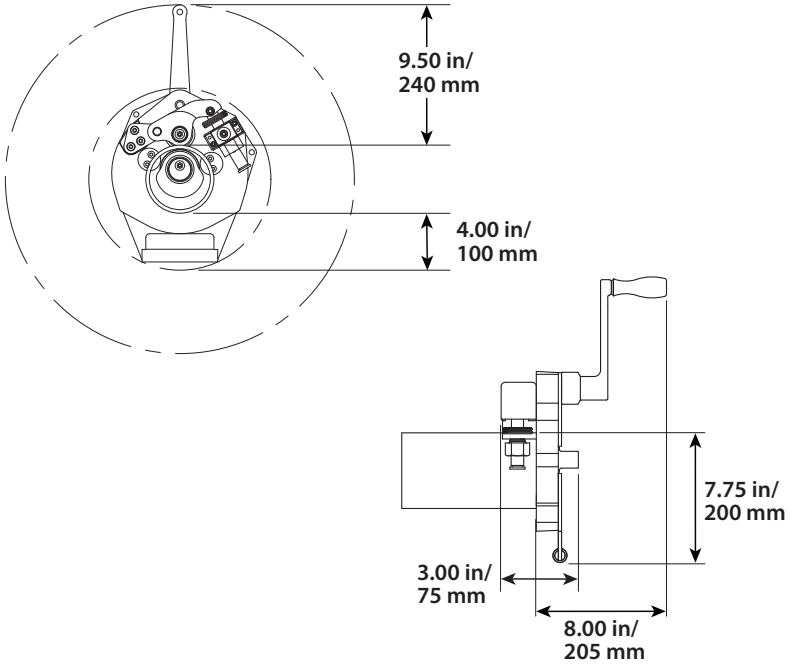

Tool weight is 35 pounds/16 kilograms.

Tool weight includes the tool head assembly, mounting plate, drive shaft/adapter, and hardware. The tool head assembly alone weighs approximately 28 pounds/13 kilograms.

Tool sound pressure for manual use is below 70 dB(A).

Tool sound pressure for powered use is 99.7 dB(A), while tool sound power is 91.7 dB(A). All measurements taken with a VPD 752 power drive.

TOOL SETUP

VE46 tools can be used to groove pipe that is supported by several different methods. Refer to the setup instructions listed in this section for different grooving options.

PIPE VISE SETUP

1. When grooving pipe that is supported with a pipe vise, select a location for the tool and pipe vise by taking into consideration the following factors:

- **a.** Adequate space to handle pipe lengths
- **b.** A firm and level surface for the pipe vise
- **c.** Anchoring requirements for the pipe vise

2. Mount a chain-type pipe vise onto a stand or workbench. The pipe vise should be mounted flush with, or slightly overhanging, the edge of the stand or workbench. When the tool is mounted on the pipe, the tool must be able to rotate freely around the pipe without being obstructed by the stand or workbench.



3. Secure a length of pipe/tubing in the pipe vise. Pipe/tubing position and pipe vise anchoring must be capable of handling the weight of the tool (28 pounds/13 kilograms), plus the manual effort required to operate the tool (approximately 20 ft-lbs/27 N•m of torque). Position the pipe/tubing to overhang the pipe vise by approximately 5–12 inches/125–300 mm, as shown, so that the tool can rotate freely.

GROOVE-IN-PLACE SETUP

⚠ WARNING

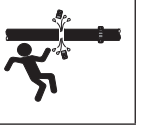

- **Depressurize and drain the piping system before attempting to disassemble any Victaulic piping products.**
- **Pipe hangers must be capable of handling the weight of the tool and the manual effort required to operate the tool.**

Failure to follow these instructions could result in serious personal injury and/or property damage.

Previously installed pipe may be grooved with a VE46 tool, provided that the pipe is supported securely and that the system is completely depressurized and drained. Pipe hangers must be capable of handling the weight of the tool (approximately 28 pounds/11 kilograms), plus the manual effort required to operate the tool (approximately 20 ft-lbs/27 N•m).

Ensure that there is adequate clearance around the pipe/tubing to permit proper tool rotation during the grooving process. Refer to the Tool Dimensions and Specifications section.

POWER DRIVE MOUNTING PLATE KIT INSTALLATION



1. Install the drive shaft/drive-adapter assembly onto the end of the lower shaft, as shown above. **NOTE:** Ensure that the holes in the drive shaft/drive-adapter assembly align with the holes in the inner grooving roll shaft.



2. Insert the hex head bolt through the holes in drive shaft/drive-adapter assembly and inner grooving roll shaft. Thread the hex nut with nylon insert onto the end of the hex head bolt, as shown above.



3. Tighten the hex nut with nylon insert to secure the drive shaft/drive-adapter assembly to the inner grooving roll shaft.





4. Install the power drive mounting plate onto the tool by placing the smaller cutout of the mounting plate toward the drive shaft/drive-adapter assembly and the larger cutout toward the drive nut, as shown above.



5a. Insert a hex head cap screw into a hole in the mounting plate and tool body. Install a lock washer onto the end of the hex head cap screw, and thread a hex nut onto the end of the hex head cap screw. Repeat this procedure with the other hole in the mounting plate and tool body.

5b. Tighten the two hex nuts to secure the mounting plate to the tool body

POWER DRIVE SETUP

⚠ WARNING

- **DO NOT plug the power drive into the electrical source until instructed otherwise.**

Accidental startup of the tool could result in serious personal injury.

The VE46 tool is intended for field or shop setup and can be attached to a Victaulic VPD752 Power Drive or a Ridgid 300 Power Drive with a 38-rpm maximum chuck speed. The power drive kit, which includes a special power drive mounting plate and hardware, must be ordered from the Victaulic.

1. Remove all components from the packaging, and ensure that all necessary items are included. Refer to the "Receiving the Tool" section.

2. Select a location for the power drive, tool, and pipe stand by taking into consideration the following factors (refer to the drawings below for overall dimensions):

a. The required power supply (Refer to the power drive manufacturer's instructions)

b. Adequate space to handle pipe lengths

c. A firm and level surface for the power drive, tool, and pipe stand

c. A firm and level surface for the power drive, tool, and pipe stand

d. Adequate clearance around the tool for adjustment and maintenance

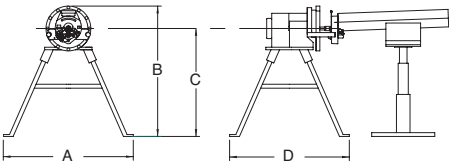

Dimensions - inches/millimeters			
A	**B**	**C**	**D**
45.00 1143.0	43.00 1092.2	37.00 939.8	41.00 1041.4



3. Ensure that the hardware is tightened to secure the power drive to the power drive stand.

NOTICE

- **The cutoff attachments, threading dies, and reamer station do not need to be removed from the power drive. Refer to the photo shown below.**





4a. Extend the two tubular support arms to their full extension beyond the chuck of the power drive.

4b. Secure the two tubular support arms in position. Refer to the power drive manufacturer's instructions.



5. Open the chuck of the power drive fully. Refer to the power drive manufacturer's instructions.

6. Refer to the "Preparation for Grooving" section to install the power drive mounting plate onto the VE46 tool.

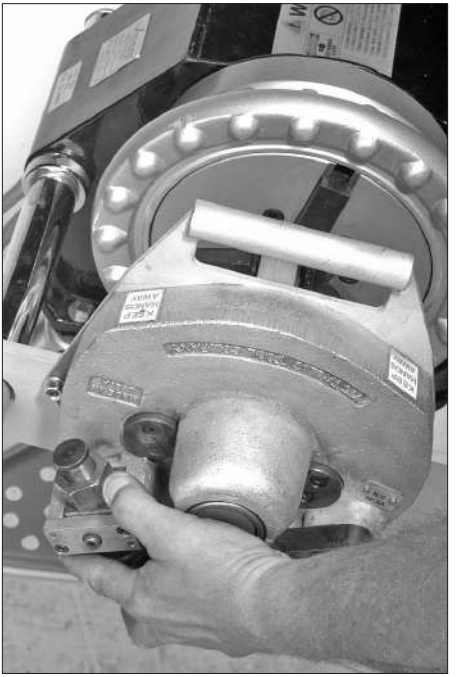

7. Orient the VE46 tool so that the roll arm is located in the 6 o'clock position. Align the flat portions of the drive shaft with the chuck jaws by turning the drive shaft. Install the tool assembly onto the power drive by inserting the drive shaft into the chuck and engaging the forks of the mounting plate with the tubular support arms of the power drive, as shown above. **NOTE:** The forks of the mounting plate should be approximately 4 inches/100 mm back from the ends of the tubular support arms, as shown above.



8. Tighten the chuck. Ensure that the chuck jaws engage with the flats of the drive shaft.

⚠ DANGER



- **To reduce the risk of electric shock, check the electrical source for proper grounding.**
- **Before performing any maintenance on the tool, turn the switch on the power drive to the "OFF" position, or disconnect the power cord from the electrical source.**

Failure to follow these instructions could result in death or serious personal injury.



9. Ensure that the switch on the power drive is in the "OFF" position. Plug the power drive into an internally grounded electrical outlet. The outlet must meet the requirements for the power drive (refer to the power drive manufacturer's instructions). If an extension cord is used, refer to the "Extension Cord Requirements" section for requirements.

⚠ WARNING

- **The power drive MUST be operated with a safety foot switch. If the power drive does not contain a safety foot switch, contact the power drive manufacturer.**
- **Operating the tool without a safety foot switch could result in serious personal injury.**



10. Turn the power drive switch to the position that will produce **CLOCKWISE** rotation of the chuck when viewed from the front of the tool. On the Victaulic VPD752 or Ridgid 300 Power Drive, placing the switch in the **REVERSE** position will produce **clockwise** rotation of the chuck, lower roll, and pipe.

11. Depress the safety foot switch, check the rotation of the chuck and lower roll, and ensure that the tool is stable. If rotation is **counterclockwise**, place the switch on the power drive to the opposite position. If the tool wobbles, ensure that the tool is mounted squarely in the chuck and that the tool is level on the floor. If the wobble persists, the power drive support arms are bent or the power drive is damaged. Have the power drive repaired if the wobble persists.

PREPARATION FOR GROOVING

The VE46 tool design eliminates the need for roll changes. However, before attempting to operate the tool, ensure that the correct tool is used for the pipe size and material being grooved. Refer to the table on page 30 for details.

PIPE PREPARATION

For proper tool operation and production of grooves that are within Victaulic specifications, the following guidelines must be followed.

1. Victaulic recommends square-cut pipe for use with grooved-end pipe products. Square-cut pipe MUST be used with Victaulic FlushSeal® gaskets. Beveled-end pipe may be used, provided that the wall thickness is standard wall (ANSI B36.10) or less and that the bevel meets ANSI B16.25 (37½º) or ASTM A-53 (30°). **NOTE:** Roll grooving beveled-end pipe may result in unacceptable flare.

2. Raised internal and external weld beads and seams must be ground flush with the pipe surface 2 inches (50 mm) back from the pipe ends.

3. All coarse scale, dirt, and other foreign material must be removed from the interior and exterior surfaces of the pipe ends.

⚠ CAUTION

- **For maximum grooving roll life, remove foreign material and loose rust from the interior and exterior surfaces of the pipe/tubing ends. Rust is an abrasive material that will wear the surface of grooving rolls.**

Foreign material may interfere with or damage grooving rolls, resulting in distorted grooves and grooves that are out of Victaulic specifications.

PIPE LENGTHS SUITABLE FOR GROOVING

(Applies only to tools installed on a power drive)

The VE46 roll grooving tool installed on a power drive is capable of grooving short pipe lengths without the use of a pipe stand. Refer to the "Short Pipe Lengths" section on this page.

Pipe lengths longer than those listed in Table 1 (and up to 20 feet/6 meters) must be supported with a pipe stand.

Pipe lengths from 20 feet (6 meters) up to double-random lengths (approximately 40 feet/12 meters) must be supported with two pipe stands.

SHORT PIPE LENGTHS

⚠ WARNING

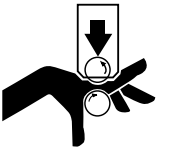

Grooving rolls can crush or cut fingers and hands.

- **Never groove pipe that is shorter than the recommended lengths listed in this manual.**

Table 1 shows the minimum and maximum pipe lengths that can be grooved without the use of a pipe stand. Refer to the "Grooving Operation For Power Drive Setup" section for instructions on how to groove short pipe lengths. For pipe longer than what is shown in Table 1, refer to the "Long Pipe Lengths" section.

NOTICE

- **Grooved pipe/tubing nipples, shorter than those listed in the following tables, are available from Victaulic.**

TABLE 1 – PIPE LENGTHS SUITABLE FOR GROOVING

Steel, Stainless Steel, Aluminum, and PVC Pipe		Length inches/mm	
Nominal Size inches or mm	**Actual Outside Dia. inches/mm**	**Minimum**	**Maximum**
3½	4.000 101.6	8 205	36 915
108.0 mm	4.250 108.0	8 205	36 915
4	4.500 114.3	8 205	36 915
4½	5.000 127.0	8 205	32 815
133.0 mm	5.250 133.0	8 205	32 815
139.7 mm	5.500 139.7	8 205	32 815
5	5.563 141.3	8 205	32 815
152.4 mm	6.000 152.4	10 255	30 765
159.0 mm	6.250 159.0	10 255	30 765
165.1 mm	6.500 165.1	10 255	28 715
6	6.625 168.3	10 255	28 715

If pipe is required that is shorter than the minimum lengths listed in the above table, shorten the next-to-last piece so that the last piece is as long (or longer) than the minimum length specified. Refer to the example that follows.

EXAMPLE: A 20-foot, 4-inch (6.19-m) length of 6-inch diameter steel pipe is required to finish a section, and only 20-foot (6.09-m) lengths are available. Instead of roll grooving a 20-foot (6.09-m) length of steel pipe and a 4-inch (101.6-mm) length of steel pipe, follow these steps:

1. Refer to Table 1 and note that, for 6-inch diameter steel pipe, the minimum length that should be roll grooved is 10 inches (254 mm).

2. Roll groove a 19-foot, 6-inch (5.94-m) length of steel pipe and a 10-inch (254-mm) length of steel pipe. Refer to the "Long Pipe Lengths" section on the following page.

LONG PIPE LENGTHS

When roll grooving pipe that exceeds the maximum length shown in Table 1, a roller-type pipe stand must be used. The roller-type pipe stand must be capable of handling the weight of the pipe, while allowing the pipe to rotate freely.

a. Ensure that the power drive and pipe stand are located on a firm and level surface.

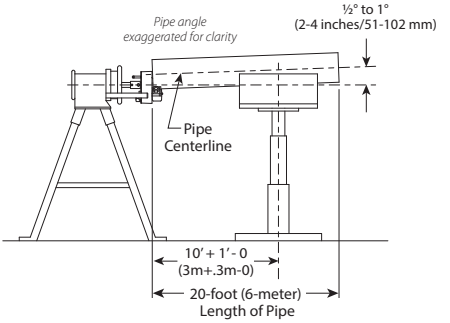

FIGURE 1 - SUPPORT OF PIPE

b. Place the pipe stand at a distance slightly beyond half the pipe length from the tool. Refer to Figure 1 above.

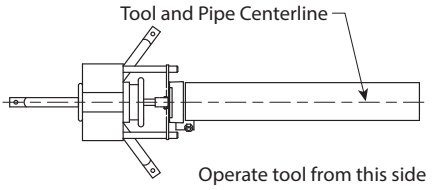

FIGURE 2 - TRACKING ANGLE

c. Position the centerline of the pipe stand along the centerline of the tool. Refer to Figure 2 above.

NOTICE

- **Pipe must be positioned ABOVE level when using VE26 or VE46 roll grooving tools with a power drive.**
- **All other Victaulic roll grooving tools require pipe positioning that is below level.**

d. Adjust the height of the pipe stand so that the pipe is approximately ½° to 1° **ABOVE** level. Refer to Figure 1 on this page. **NOTE:** The pipe must be inserted into the rolls while the height of the pipe stand is adjusted.

⚠ CAUTION

- **Ensure that the pipe stand is positioned properly to prevent flaring of the pipe end.**

Installation of couplings on pipe that exceeds the maximum allowable flare may prevent pad-to-pad closure of the housings and/or may cause damage to the coupling gasket, resulting in property damage.

NOTICE

- **Figure 1 shows the Victaulic Adjustable Pipe Stand (VAPS 112). The VAPS 112 is suitable for ¾ – 12-inch sizes. The Victaulic Model VAPS 224 is suitable for 2 – 24-inch sizes. Refer to the "Accessories" section.**
- **For additional information about pipe stands, refer to the instructions included with the pipe stand.**

GROOVE DEPTH ADJUSTMENT

The depth stop collars must be adjusted for each pipe size or change in wall thickness. The groove diameter is identified as the "C" dimension (reference the groove specification link on page 31). In addition, a label is affixed to the tool, which lists the "C" dimensions for the pipe sizes.

NOTICE

- **To perform the following adjustments, use several short scrap sections of pipe that is the proper material, diameter, and thickness to be grooved. Ensure that the scrap sections meet the length requirements in Table 1.**

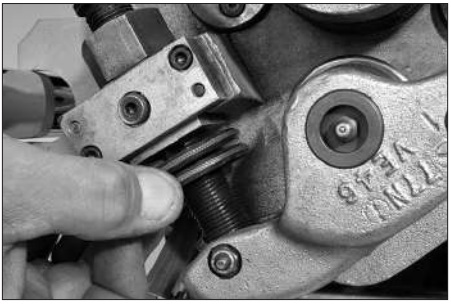

1. Unlock and separate the depth stop collars by turning them in opposite directions.



2. Clamp the pipe in the tool by turning the feed nut clockwise. Continue to turn the feed nut clockwise until the grooving rolls make firm contact with the pipe.

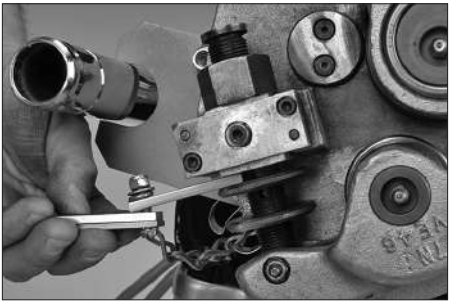

3. Remove the groove depth gauges from the clip on the tool. The groove depth gauges are identified with the pipe size. Select the correct groove depth gauge, and place it between the depth stop collar and trunnion, as shown above.



4a. Using the groove depth gauge like a feeler gauge, turn the depth stop collar until it contacts the groove depth gauge firmly against the top of the trunnion. Turn the second collar until it is locked firmly against the depth stop collar. Locking the two collars will maintain the gap set with the groove depth gauge.

4b. Remove the groove depth gauge from between the collar and trunnion. Place the groove depth gauges back into the clip provided on the tool.

5. Prepare a trial groove. Refer to the applicable "Grooving Operation" section.

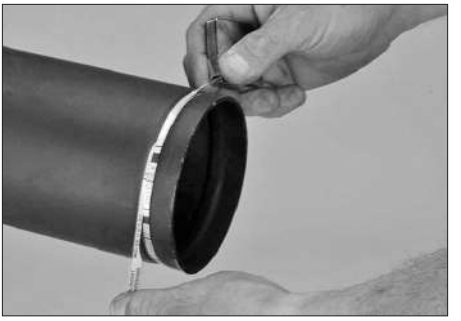

6. After a trial groove is prepared and the pipe is removed from the tool, carefully check the groove diameter ("C" dimension). Reference the groove specification link on page 31. The PT-100 Pipe Tape, supplied with the tool, is the best method for checking the "C" dimension. In addition, a vernier caliper or narrow-land micrometer can be used to check this dimension at two locations (90° apart) around the groove. The average reading must be within the required groove diameter specification.

⚠ CAUTION

- **The "C" dimension (groove diameter) must conform to Victaulic specifications to ensure proper joint performance.**

Failure to follow this instruction could cause joint failure, resulting in personal injury and/or property damage.

7. If the groove diameter ("C" dimension) is not within Victaulic specifications, the depth stop collars must be adjusted.

a. To adjust for a smaller groove diameter, turn the depth stop collars away from the trunnion.

b. To adjust for a larger groove diameter, turn the depth stop collars toward the trunnion.

NOTE: A quarter-turn either way will change the groove diameter approximately 0.012 inch (0,3 mm) or 0.048 inch (1,2 mm) per full turn.

8. Prepare another trial groove, and check the groove diameter ("C" dimension), as described in steps 5 - 6 on this page. Repeat these steps, as necessary, until the groove diameter is within specification.

GROOVING OPERATION FOR PIPE VISE OR GROOVE-IN-PLACE SETUP

⚠ CAUTION

- **This tool must be used ONLY for roll grooving pipe designated in the table on page 30 of this manual.**

Failure to follow this instruction could overload the tool, resulting in reduced tool life and/or damage to the tool.

1. Ensure that the proper tool is selected for the pipe to be grooved. Refer to the table on page 30 for details.

2. Before grooving, ensure that all applicable instructions in the previous sections of this manual have been followed.

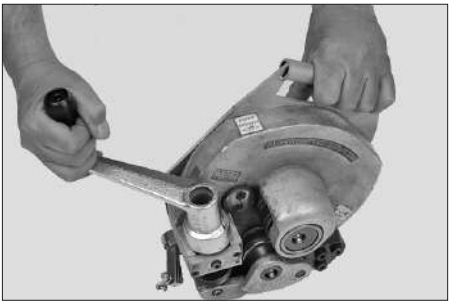

3. Retract the roll arm fully by turning the feed nut **counterclockwise.**



4. With the drive nut toward the bottom (down position), insert the nose of the tool body into the pipe end. Push the tool onto the pipe until the pipe end contacts the two pipe-end stops.

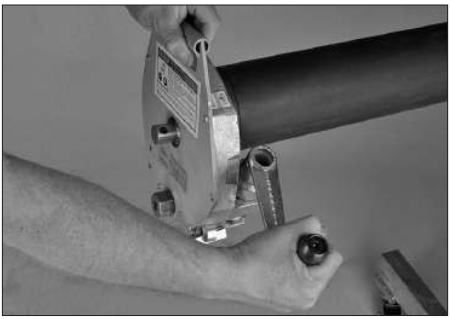

5. Draw the rolls together by turning the feed nut **clockwise.** Continue to turn the feed nut **clockwise** until the grooving rolls make firm contact with the pipe.

⚠ CAUTION

- **DO NOT exceed the feed rates listed in this section.**
- **Over-tightening (over-feeding) will result in shortened bearing life and other tool damage.**
- **Over-tightening and under-tightening could result in the tool "walking" off the pipe.**

Failure to follow these instructions could cause personal injury and/or tool damage.

6. Set the groove depth by referring to the "Groove Depth Adjustment" section.



7. Advance the grooving roll by turning the feed nut **clockwise**. Refer to the "VE46 Feed Rates" table on the following page. **NOTE:** Feed rates for VE46 tools vary depending upon the pipe material and wall thickness. DO NOT exceed the feed rates listed in this table.

VE46 FEED RATES

Tools	Pipe Material	Wall Thickness inches/mm	Recommended Turns of Feed Nut to Advance the Grooving Roll
VE46S	Steel and Stainless Steel	0.083 – 0.134 2.1 – 3.4	½ turn
		0.135 – 0.280 3.4 – 7.1	¼ turn
VE46P	Aluminum	0.083 – 0.134 2.1 – 3.4	⅔ turn
		0.135 – 0.280 3.4 – 7.1	⅓ turn
VE46P	PVC Plastic	0.226 – 0.432 5.7 – 11.0	¾ turn



8. Place the hand crank onto the drive nut. Crank the drive nut either **clockwise** or **counterclockwise** until the tool travels one full turn around the pipe.

NOTE: A ratchet with a 1 ¼-inch (32-mm) socket (not supplied) may be used in place of the hand crank to operate the VE46 tool in low clearance conditions.



9. Advance the grooving roll by turning the feed nut **clockwise**. Refer to the "VE46 Feed Rates" table on this page for the recommended amount of turns of the feed nut.



10. Crank the tool another full turn around the pipe.



11. Continue grooving by advancing the feed and cranking the tool around the pipe until the depth stop collar contacts the trunnion. At this point, the grooving roll cannot be advanced any further.



12. Crank the tool one to three additional full turns around the pipe to ensure groove completion.

DISMOUNTING THE TOOL

⚠ CAUTION

- **Always support the tool while retracting the grooving roll. Retracting the grooving roll loosens the tool from the pipe.**

Failure to follow these instructions could cause the tool to fall, resulting in personal injury and/or tool damage.



1. Crank the tool until the drive nut is located in the down position.

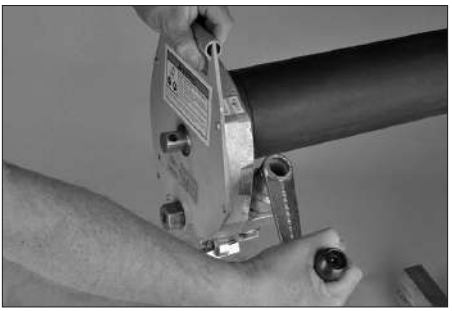

2. While supporting the tool, retract the grooving roll and arm to the fully open position by turning the feed nut **counterclockwise.**

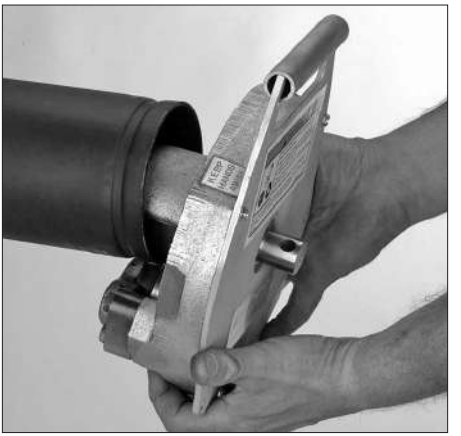

3. Remove the tool from the pipe.

NOTICE

- **The groove diameter must be within specification for the diameter and wall thickness of pipe. The groove diameter should be checked and adjusted, as necessary, to ensure that grooves remain within specification. Refer to the "Groove Depth Adjustment" section.**

GROOVING OPERATION FOR POWER DRIVE SETUP

⚠ CAUTION

- **This tool must be used ONLY for the roll grooving of pipe designated in the table on page 30 of this manual.**

Failure to follow this instruction could overload the tool, resulting in reduced tool life and/or damage to the tool.

⚠ DANGER



- **To reduce the risk of electric shock, check the electrical source for proper grounding.**
- **Before operating the tool, review the "Operator Safety Instructions" section of this manual.**

Failure to follow these instructions could result in death or serious personal injury.

1. Ensure that the proper tool is selected for the pipe to be grooved. Refer to the table on page 30 for details.

2. Before grooving, ensure that all applicable instructions in the previous sections of this manual have been followed.

3. Plug the power drive into an internally grounded electrical source. **NOTE:** The power drive **MUST** be grounded. Refer to the power drive manufacturer's instructions for detailed information.



4. Set the power drive switch to produce **CLOCKWISE** rotation of the VE46 inner roll and pipe when viewed from the front of the tool. On the Victaulic VPD752 Power Drive or the Ridgid 300 Power Drive, place the switch in the **REVERSE** position to produce **clockwise** rotation of the inner roll and pipe.

⚠ WARNING

- **The power drive MUST be operated with a safety foot switch. If the power drive does not contain a safety foot switch, contact the power drive manufacturer.**

Operating the tool without a safety foot switch could result in serious personal injury.

5. Ensure that the tool is operational by depressing the safety foot-switch pedal. The inner roll must turn **CLOCKWISE** when viewed from the front of the tool. Remove foot from the safety foot switch.

⚠ WARNING

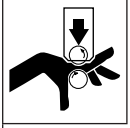

Grooving rolls can crush or cut fingers and hands.

- **Before making any tool adjustments, always turn the switch on the power drive to the "OFF" position, or disconnect the power cord from the electrical source.**
- **Loading and unloading pipe will place your hands close to the rollers. Keep hands away from the grooving rolls during operation.**
- **Never reach inside pipe end or across the tool or pipe during operation.**
- **Always groove pipe in a CLOCKWISE direction only.**
- **Never groove pipe that is shorter than the recommended lengths listed in this manual.**
- **Never wear loose clothing, jewelry, or anything else that can become entangled in moving parts.**

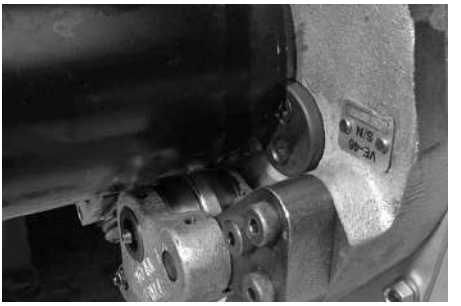

6. Insert a length of pipe that is the correct size and thickness onto the lower roll. Ensure that the pipe end contacts the two pipe-end stops completely.



7a. Draw the rolls together by turning the feed nut **clockwise.** Continue to turn the feed nut **clockwise** until the grooving rolls make firm contact with the pipe.

7b. Remove hands from the pipe.

⚠ CAUTION

- **DO NOT exceed the feed rates listed in this section.**
- **Over-tightening (over-feeding) will result in shortened bearing life and other tool damage.**
- **Over-tightening and under-tightening could result in the tool "walking" off the pipe.**

Failure to follow these instructions could cause personal injury and/or tool damage.



8. Advance the grooving roll by turning the feed nut **clockwise.** Refer to the "VE46 Feed Rates" table on this page. **NOTE:** Feed rates for VE46 tools vary depending upon the pipe material and wall thickness. DO NOT exceed the feed rates listed in this table.

VE46 FEED RATES

Tools	Pipe Material	Wall Thickness inches/mm	Recommended Turns of Feed Nut to Advance the Grooving Roll
VE46S	Steel and Stainless Steel	0.083 – 0.134 2.1 – 3.4	½ turn
		0.135 – 0.280 3.4 – 7.1	¼ turn
VE46P	Aluminum	0.083 – 0.134 2.1 – 3.4	⅔ turn
		0.135 – 0.280 3.4 – 7.1	⅓ turn
VE46P	PVC Plastic	0.226 – 0.432 5.7 – 11.0	¾ turn

9. Set the groove depth by referring to the "Groove Depth Adjustment" section.

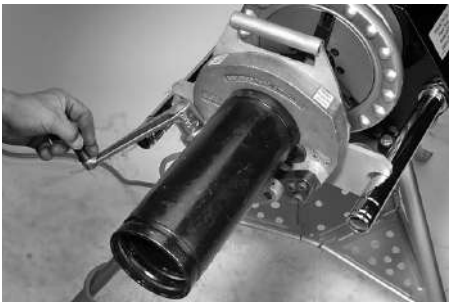

10. Depress and hold down the safety foot-switch pedal. The pipe will begin to rotate **clockwise.** As the pipe rotates, begin the grooving process. Using the hand crank supplied with the tool, advance the grooving roll by turning the feed nut **clockwise.** Refer to the "VE46 Feed Rates" table for the recommended amount of turns of the feed nut. **NOTE:** A ratchet with a 1¼-inch (32-mm) socket (not supplied) may be used in place of the hand crank.



11. Continue grooving by turning the feed nut to advance the grooving roll until the depth stop collar contacts the trunnion. At this point, the feed nut cannot be advanced any further.

12. Continue pipe rotation for one to three additional revolutions to ensure groove completion.

13. Release the safety foot-switch pedal, and withdraw foot from the safety foot switch.

⚠ WARNING

- **DO NOT place hands inside the pipe/tubing end or in the area of the grooving rolls while the pipe/tubing is still rotating.**

Failure to follow this instruction could result in serious personal injury.

14. If a short length of pipe is in the tool, manually support the pipe.



15. To release the pipe, turn the feed nut **counterclockwise** to retract the roll arm to the fully open position. Slide the pipe out of the tool.

NOTICE

- **The groove diameter must be within specification for the diameter and wall thickness of pipe/tubing. The groove diameter should be checked and adjusted, as necessary, to ensure that grooves remain within specification.**

MAINTENANCE

⚠ DANGER



- **Before performing any maintenance on a tool installed on a power drive, turn the switch on the power drive to the "OFF" position, or disconnect the power cord from the electrical source.**

Failure to follow this instruction could result in death or serious personal injury.

This section provides information about keeping tools in proper operating condition and guidance for making repairs when it becomes necessary. Preventive maintenance during operation will pay for itself in repair and operating savings. Replacement parts must be ordered from Victaulic to ensure proper and safe operation of the tool.

LUBRICATION

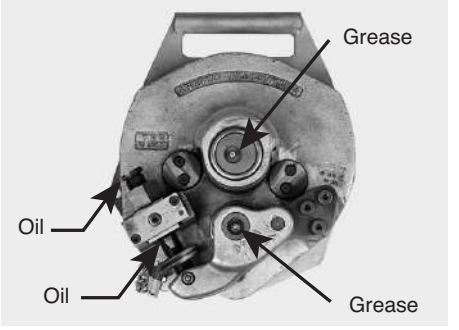

1. After every 8 hours of operation, grease the bearings at the two grease fittings on the tool with a No. 2EP lithium-based grease.

2. On a weekly basis, apply a light oil (SAE 10W-30 or equivalent) to the threads where the feed screw passes through the feed nut. Apply oil to the feed screw and trunnion pivots.

PARTS ORDERING INFORMATION

When ordering parts, the following information is required for the Victaulic to process the order and send the correct part(s). Request the RP-46 Repair Parts List for detailed drawings and parts listings.

1. Tool Model Number – VE46
2. Tool Serial Number – The serial number is stamped onto the tool body
3. Quantity, Part Number, and Description
4. Where to Send the Part(s) – Company Name and Address
5. To Whose Attention to Send the Part(s)
6. Purchase Order Number

Parts can be ordered by calling 1-800-PICK VIC.

ACCESSORIES

VAPS 112 VICTAULIC ADJUSTABLE PIPE STAND



The Victaulic VAPS 112 is a portable, adjustable, roller-type pipe stand that contains four legs for additional stability. Ball transfer rollers, adjustable for ¾–12-inch pipe, accommodate linear and rotational movement. The turnstile design permits ease of grooving for both pipe ends. Contact Victaulic for details.

VAPS 224 VICTAULIC ADJUSTABLE PIPE STAND



The Victaulic VAPS 224 contains features that are similar to the VAPS 112, but it is suitable for 2–24-inch pipe sizes. Contact Victaulic for details.

VPD752 POWER DRIVE



The Victaulic VPD752 Power Drive can be used as the power drive unit for several different roll grooving tool models with the correct base plate. The power drive utilizes a 60 Hz universal motor and requires 115V/1 Phase, 15 amps of power. A safety foot switch is included for proper operation. Contact Victaulic for details.

TROUBLESHOOTING

GENERAL AND "IN-PLACE" GROOVING

PROBLEM	POSSIBLE CAUSE	SOLUTION
Unable to close rolls on pipe.	Improper adjustment of the depth stop collars.	Turn the depth stop collars away from the trunnion, and reset the depth stop collar. Refer to the "Groove Depth Adjustment" section on page 17.
Tool does not move when cranked.	Rust or dirt build-up is present on the roll set.	Remove rust or dirt accumulation from the roll set with a stiff wire brush.
	Worn roll set.	Inspect the roll set for worn knurls. Replace the roll set if excessive wear is present.
Tool wobbles during cranking.	Variation in pipe wall thickness or inadequate feed rate.	Advance the feed at the rate specified in the appropriate "Grooving Operation" section.
Tool will not track (tool "walks" or falls off pipe).	Tool is not correctly positioned on the pipe.	Reposition the tool so that the pipe is against the two pipe-end stops.
	Pipe end is not cut square.	Cut the pipe square. Refer to the "Pipe Preparation" section on page 14.
	Improper feed rate.	Advance the feed at the rate specified in the appropriate "Grooving Operation" section.
The tool will not groove the pipe.	Pipe is beyond the wall thickness capacity of the tool.	Refer to the table on page 30.
	Pipe material is excessively hard.	Refer to the table on page 30.
Pipe grooves do not meet Victaulic specifications.	Depth stop collars are not adjusted correctly.	Refer to the "Groove Depth Adjustment" section on page 17.
	Pipe is beyond the wall thickness capacity of the tool.	Refer to the table on page 30.
Groove is too deep (groove diameter is too small).	Improper adjustment of the depth stop collars.	Reset the depth stop collars by referring to the "Groove Depth Adjustment" section on page 17.
Groove is too shallow (groove diameter is too large).	Improper adjustment of the depth stop collars.	Reset the depth stop collars by referring to the "Groove Depth Adjustment" section on page 17.
The "A" Gasket Seat or "B" Groove Width dimensions do not meet Victaulic specifications.	Incorrect tool was selected for the pipe material.	Select the correct tool by referring to the table on page 30.

TROUBLESHOOTING (CONTINUED)

TOOLS INSTALLED ON A POWER DRIVE

PROBLEM	POSSIBLE CAUSE	SOLUTION
Pipe will not stay in the grooving rolls.	Incorrect pipe positioning of long pipe length.	Refer to the "Long Pipe Lengths" section on page 16.
	Roll set and pipe are not rotating clockwise.	Flip the switch on the power drive to the opposite rotation position.
Pipe stops rotating during grooving.	Rust or dirt build-up is present on the roll set.	Remove rust or dirt accumulation from the roll set with a stiff wire brush.
	Rust or dirt is excessively heavy inside the pipe end.	Remove heavy rust and dirt from inside the pipe end.
	Worn roll set.	Inspect the roll set for worn knurls. Replace the roll set if excessive wear is present.
	Power drive has stalled due to over-advancing the grooving roll.	Ensure that that the pipe is supported. Release the pipe by turning the feed nut counterclockwise, which will retract the roll arm and grooving roll to the fully open position. Refer to the "Grooving Operation For Power Drive Setup" section on page 21 to start the grooving process again.
	The circuit breaker has tripped or a fuse has blown out on the electrical circuit that supplies the power drive.	Reset the breaker, or replace the fuse.
While grooving, loud squeaks echo through the pipe.	Incorrect pipe support positioning on long pipe. Pipe is "over-tracking."	Reposition the pipe support. Refer to the "Long Pipe Lengths" section on page 16.
	Pipe is not cut square.	Cut the pipe end squarely.
	Pipe is rubbing excessively on the two pipe-end stops.	Remove the pipe from the tool. Apply a light coating of grease to the two pipe-end stops, as needed.
During grooving, loud thumps or bangs occur approximately once every revolution of the pipe.	Pipe has a pronounced weld seam.	Grind the weld seam flush with the interior and exterior pipe surfaces, 2 inches/50 mm back from the pipe end.
Pipe flare is excessive.	Pipe support is not adjusted properly for a long length of pipe.	Refer to the "Long Pipe Lengths" section on page 16.
	Tool is tilted backward while grooving a long length of pipe.	Refer to the "Long Pipe Lengths" section on page 16.
	Incorrect pipe support positioning of a long length of pipe. Pipe is "over-tracking."	Reposition the pipe support. Refer to the "Long Pipe Lengths" section on page 16.

In the event of tool malfunction outside the scope of the troubleshooting section, contact Victaulic Engineering Services for assistance.

NOTICE

- **The "Maximum Pipe Size and Wall Thickness Capacity" table below is accurate as of the date printed on the back cover of this manual. For the most up-to-date information, reference Victaulic publication 24.01, which can be viewed/downloaded by scanning the mobile QR code link to the right, or by clicking on this desktop link: https://www.victaulic.com/assets/uploads/literature/24.01.pdf**

VE46 RATINGS - MAXIMUM PIPE SIZE AND WALL THICKNESS CAPACITY

			Pipe Size (inches/mm)				
Model	**Pipe Material**	**Notes**	**3½ 90**	**4 100**	**4½**	**5**	**6 150**
VE46S	Steel		Sch. 5 – 40 2.1 – 7.1 mm				
	Stainless		Sch. 40S Only 5.7 – 7.1 mm				
VE46P	Aluminum	1	Sch. 5 – 40 2.1 – 7.1 mm				
	PVC Plastic		Sch. 40 – 80 5.7 – 11.0 mm				

[1] 6061-T4 or 6063-T4 Alloy must be used.

OGS GROOVE SPECIFICATIONS

For the most up-to-date information regarding OGS roll groove specifications, reference the current revision of Victaulic publication 25.01, which can be viewed/downloaded by scanning the mobile QR code link to the right, or by clicking on this desktop link:
https://www.victaulic.com/assets/uploads/literature/25.01.pdf

ADDITIONAL RESOURCES

For additional information on 24-inch/DN600 and smaller Victaulic mechanical piping products for carbon steel, stainless steel, aluminum, and CPVC/PVC pipe, reference the current revision of the I-100 Field Installation Handbook, which can be viewed/downloaded by scanning the mobile QR code link to the right, or by clicking on this desktop link:
https://www.victaulic.com/assets/uploads/literature/I-100.pdf

EC DECLARATION OF INCORPORATION

In Accordance with the Machinery Directive 2006/42/EC

Victaulic Company, headquartered at 4901 Kesslersville Road, Easton, PA 18040, USA, hereby declares that the machinery listed below complies with the essential safety requirements of the Machinery Directive, 2006/42/EC.

Product Model:	VE-26 Models (VE-26S, VE-26C, VE-26P, VE-26SS) VE-46 Models (VE-46S, VE46P)
Serial No. :	Refer to Machinery Nameplate
Product Description:	Portable Pipe Roll Grooving Tool
Conformity Assessment:	2006/42/EC, Annex I
Technical Documentation:	The relevant technical documentation prepared in accordance with Annex VII (B) of the Machinery Directive 2006/42/EC, will be made available upon request to the governing authorities.
Compatible Power Drives:	When installed with any of the following power drive units, each having an appropriate EC Declaration of Conformity in accordance with Annex II (A) of the Directive 2006/42/EC, the VE-26 and VE-46 may be commissioned for their full intended purposes:

Victaulic VPD752	Victaulic VPD753	Ridgid* 300

Authorized Representative:

Victaulic Company
c/o Victaulic Europe BVBA
Prijkelstraat 36
9810, Nazareth
Belgium

Signed for and on behalf of Victaulic Company,

Mr. Len R. Swantek
Director – Global Regulatory Compliance
Machinery Manufacturer Representative

Place of Issue: Easton, Pennsylvania, USA
Date of Issue: April 11, 2016

MD_Dol_RGT_004_041116_en

*RIDGID IS A REGISTERED TRADEMARK OF RIDGE TOOL COMPANY.
VICTAULIC IS A REGISTERED TRADEMARK OF VICTAULIC COMPANY. ©2013 VICTAULIC COMPANY. ALL RIGHTS RESERVED.

UK DECLARATION OF INCORPORATION

In Accordance with The Supply of Machinery (Safety) Regulations 2008 No. 1597

Victaulic Company, headquartered at 4901 Kesslersville Road, Easton, PA 18040, USA, hereby declares that the machinery listed below complies with the essential safety requirements of The Supply of Machinery (Safety) Regulations 2008 No. 1597.

Product Models:	VE-26, VE-46 models (-26S, -26C, -26P, -26SS, -46S, -46P)
Serial No. :	Refer to Machinery Nameplate
Product Description:	Portable Pipe Roll Grooving Tool
Conformity Assessment:	2008 No. 1597, Annex I
Technical Documentation:	The relevant technical documentation prepared in accordance with Annex VII (A) of The Supply of Machinery (Safety) Regulations 2008 No. 1597, will be made available upon request to the governing authorities.
Compatible Power Drives:	When installed with any of the following power drive units, each having an appropriate UK Declaration of Conformity in accordance with The Supply of Machinery (Safety) Regulations 2008 No. 1597, the VE26 and VE46 may be commissioned for its full intended purpose:

Victaulic VPD752	Victaulic VPD753	Ridgid 300

Authorized Representative:

Victaulic Company
c/o Victaulic Europe BVBA
Units B1 & B2
Cockerell Close off Gunnels
Wood Road
Stevenage, Hertfordshire
SG1 2NB, United Kingdom

Signed for and on behalf of Victaulic Company,

Mr. Len R. Swantek
Director – Global Regulatory Compliance
Machinery Manufacturer Representative

Place of Issue: Easton, Pennsylvania, USA
Date of Issue: May 17, 2021

Victaulic and all other Victaulic marks and logos are registered trademarks of Victaulic Company and/or its affiliates. ©2021 All Rights Reserved

VE46 Pipe/Tubing Roll Grooving Tools

TM-VE46 1924 REV D UPDATED 12/2022 RM00046000
VICTAULIC IS A REGISTERED TRADEMARK OF VICTAULIC COMPANY AND/OR ITS AFFILIATED ENTITIES IN THE UNITED STATES AND/OR OTHER COUNTRIES.
© 2022 VICTAULIC COMPANY. ALL RIGHTS RESERVED.